Antenna THP 12 212 S

Antenna THP 12 212 S

General Specifications

Diameter	1.2m
Standard Colour	RAL 7035
Shroud	Low profile
Antenna Input	Interface for IEC waveguide R 220
Polarization	Single

Mechanical Characteristics

Pole	115 mm
Elevation-fine adjustment	+/- 15 deg
Azimuth-fine adjustment	+/- 10 deg
Side struts, included	1
Side struts, optional	0
Net weight	50 Kg
Radome	Rigid plastic
Wind velocity Operational	45 m/s
Wind velocity Survival	70 m/s
Wind deflection	<0.3 times the - 3 dB beam width
(with a wind velocity of 45 m/s)	Specified wind deflection applies for 115 mm dia mounting pipe only

Antenna Dimensions

(pole mount included)

Height	1260 mm
Width	1260 mm
Depth	818 mm

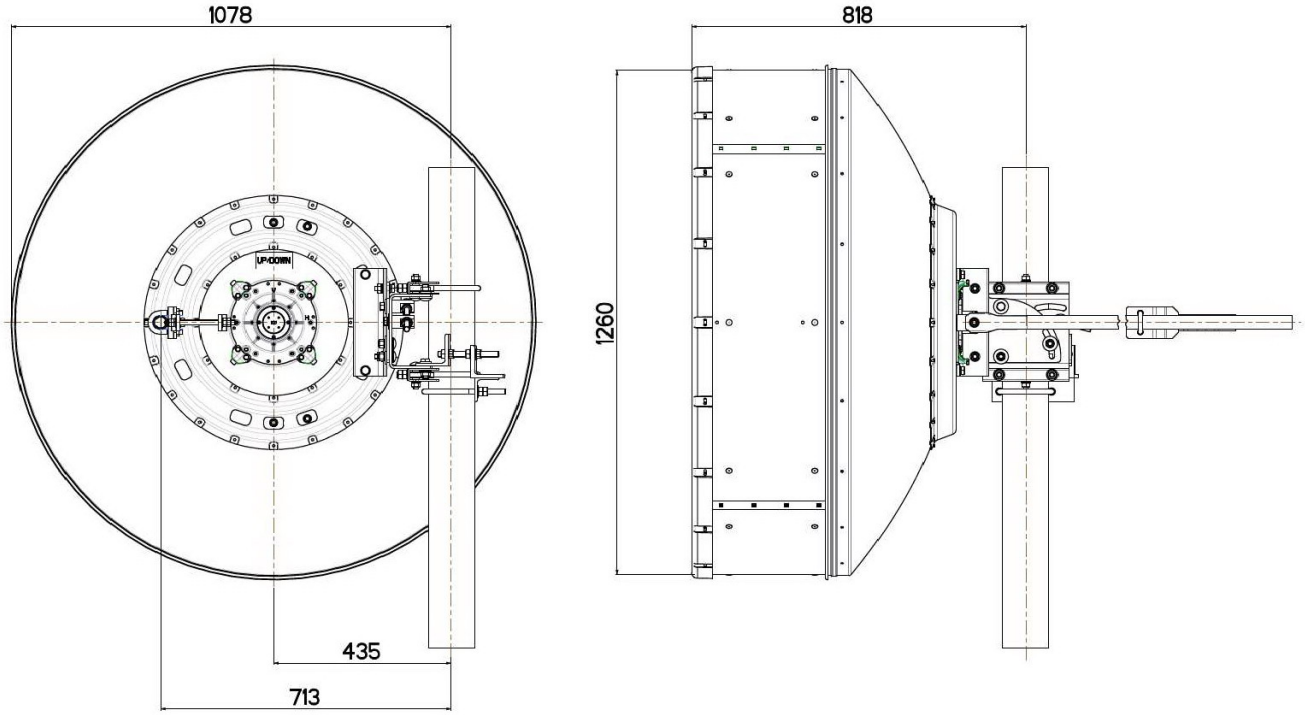

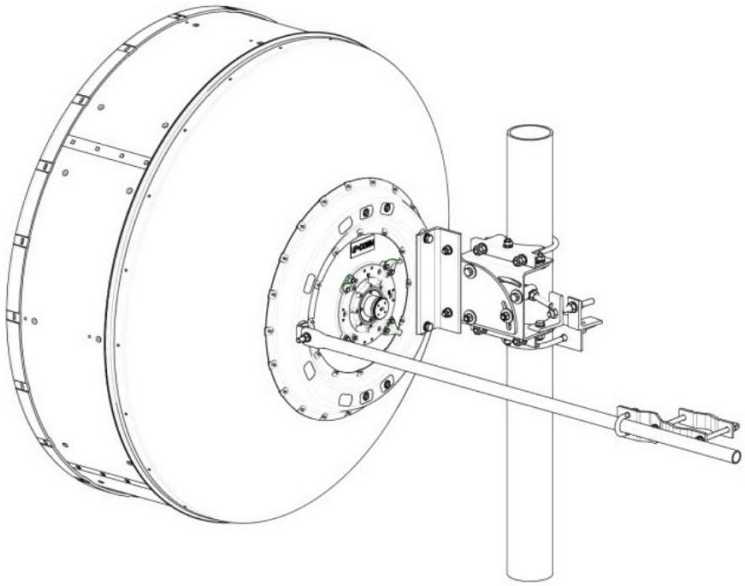

Wind forces at wind velocity survival rating and with 25 mm (1") ice load

Axial force	5270 N
Side force	2610 N
Twisting Moment	2110 N m

Maximum forces exerted on a supporting structure as a result of wind (survival rating) from the most critical direction for each parameter. These values may not occur simultaneously. All forces are refered to the mounting pipe of 115 mm diameter.

Electrical Characteristics

Frequency range	21.2 - 23.6 GHz
Gain, low band	45.9 dBi
Gain, mid band	46.3 dBi
Gain, top band	46.7 dBi
Return Loss	17.7 dB
VSWR	1.3
HPBW	0.8°
Front to back ratio	72.0 dB
Isolation	NA
XPD	30.0 dB
Electrical Compliance	Class 3
	ETSI 302 217

Shipping Information

Gross weight	78 Kg
Height	1530 mm
Depth	480 mm
Width	1380 mm
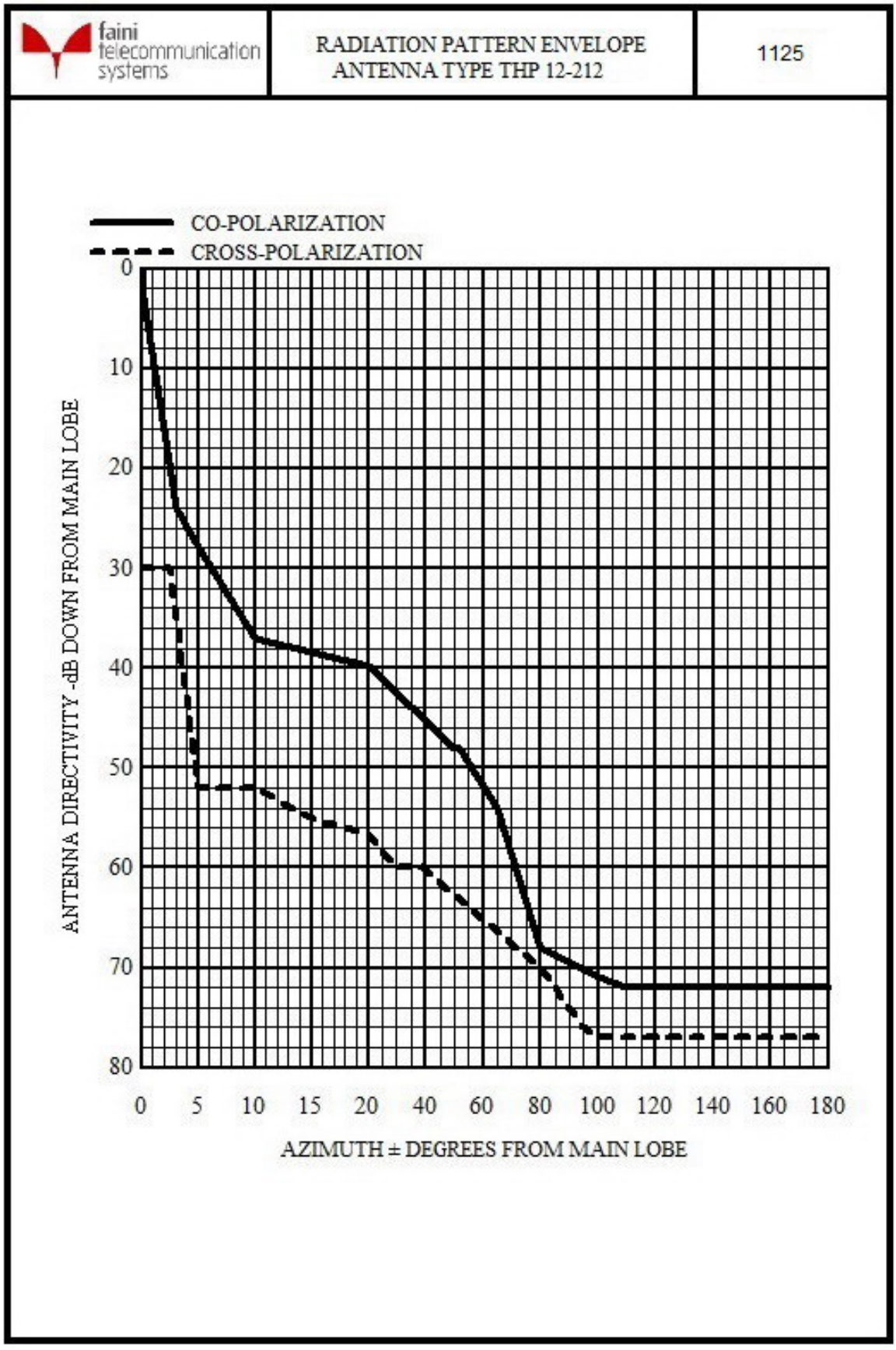
faini telecommunication systems	RADIATION PATTERN ENVELOPE ANTENNA TYPE THP 12-212	1125