Antenna THP 06 177 D

Antenna THP 06 177 D

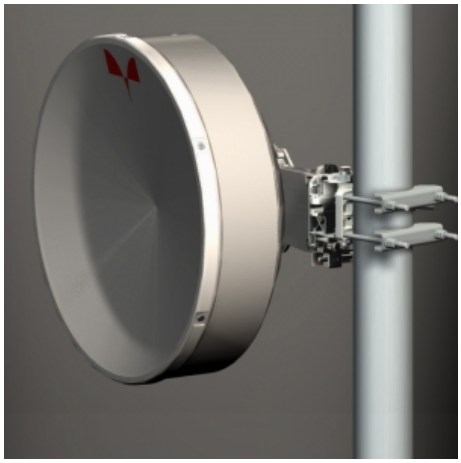

General Specifications

Diameter	0.6m
Standard Colour	RAL 7035
Shroud	Low profile
Antenna Input	Interface for IEC waveguide R 220
Polarization	Dual

Mechanical Characteristics

Pole	50-115 mm
Elevation-fine adjustment	+/- 15 deg
Azimuth-fine adjustment	+/- 20 deg
Side struts, included	0
Side struts, optional	0
Net weight	12.5 Kg
Radome	Rigid plastic
Wind velocity Operational	45 m/s
Wind velocity Survival	70 m/s
Wind deflection	< 0.3 times the - 3 dB beam width
(with a wind velocity of 45 m/s)	Specified wind deflection applies for 115 mm dia mounting pipe only

Antenna Dimensions

(pole mount included)

Height	653.0 mm
Width	719.0 mm
Depth	330.5 mm

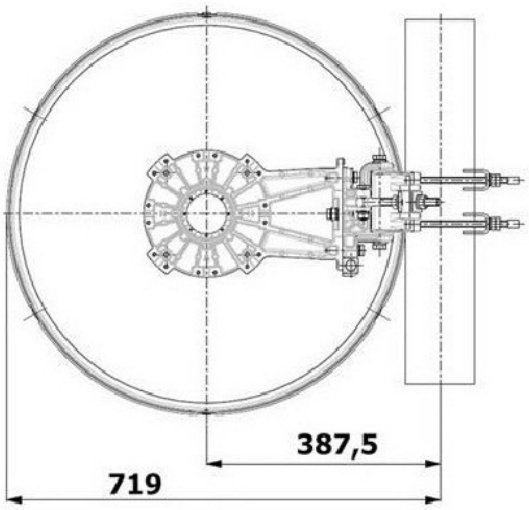

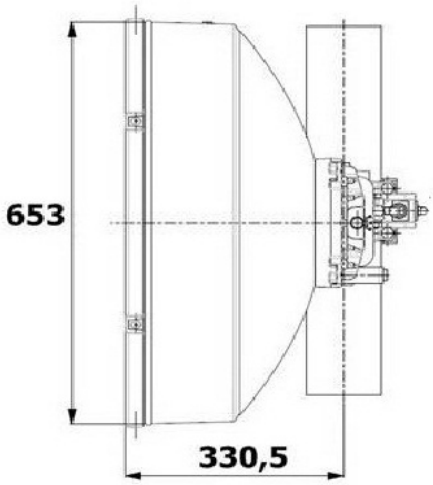

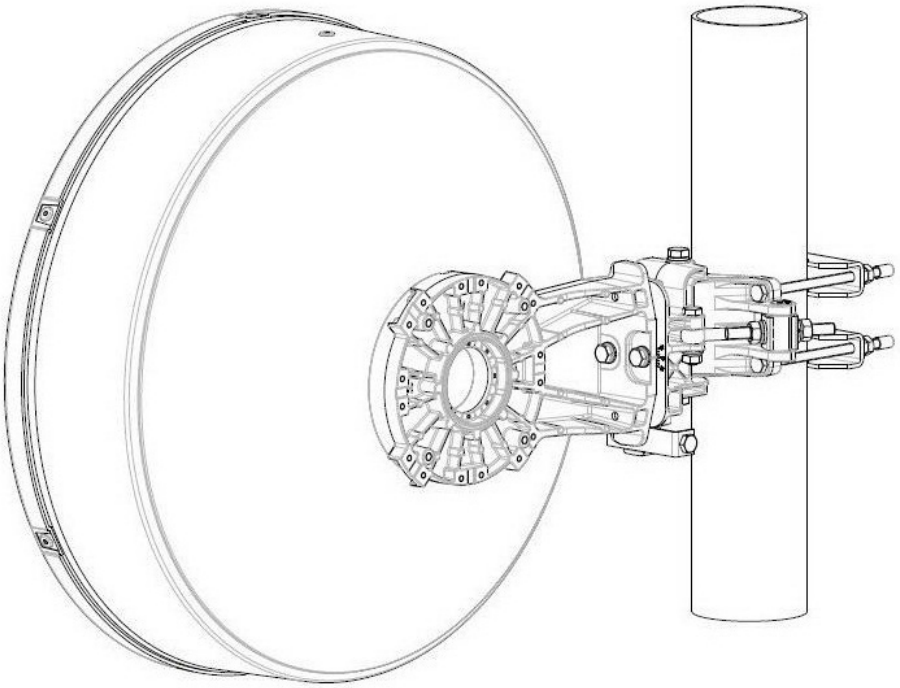

Wind forces at wind velocity survival rating and with 25 mm (1") ice load

Axial force	1444 N
Side force	715 N
Twisting Moment	527 N m

Maximum forces exerted on a supporting structure as a result of wind (survival rating) from the most critical direction for each parameter. These values may not occur simultaneously. All forces are referred to the mounting pipe of 115 mm diameter.

Electrical Characteristics

Frequency range	17.7 - 19.7 GHz
Gain, low band	38.5 dBi
Gain, mid band	38.8 dBi
Gain, top band	39.3 dBi
Return Loss	17.7 dB
VSWR	1.3
HPBW	
Front to back ratio	67.0 dB
Isolation	35 dB
XPD	30.0 dB
Electrical Compliance	Class 3
	ETSI 302 217

Shipping Information

Gross weight	18 Kg
Height	520 mm
Depth	750 mm
Width	750 mm
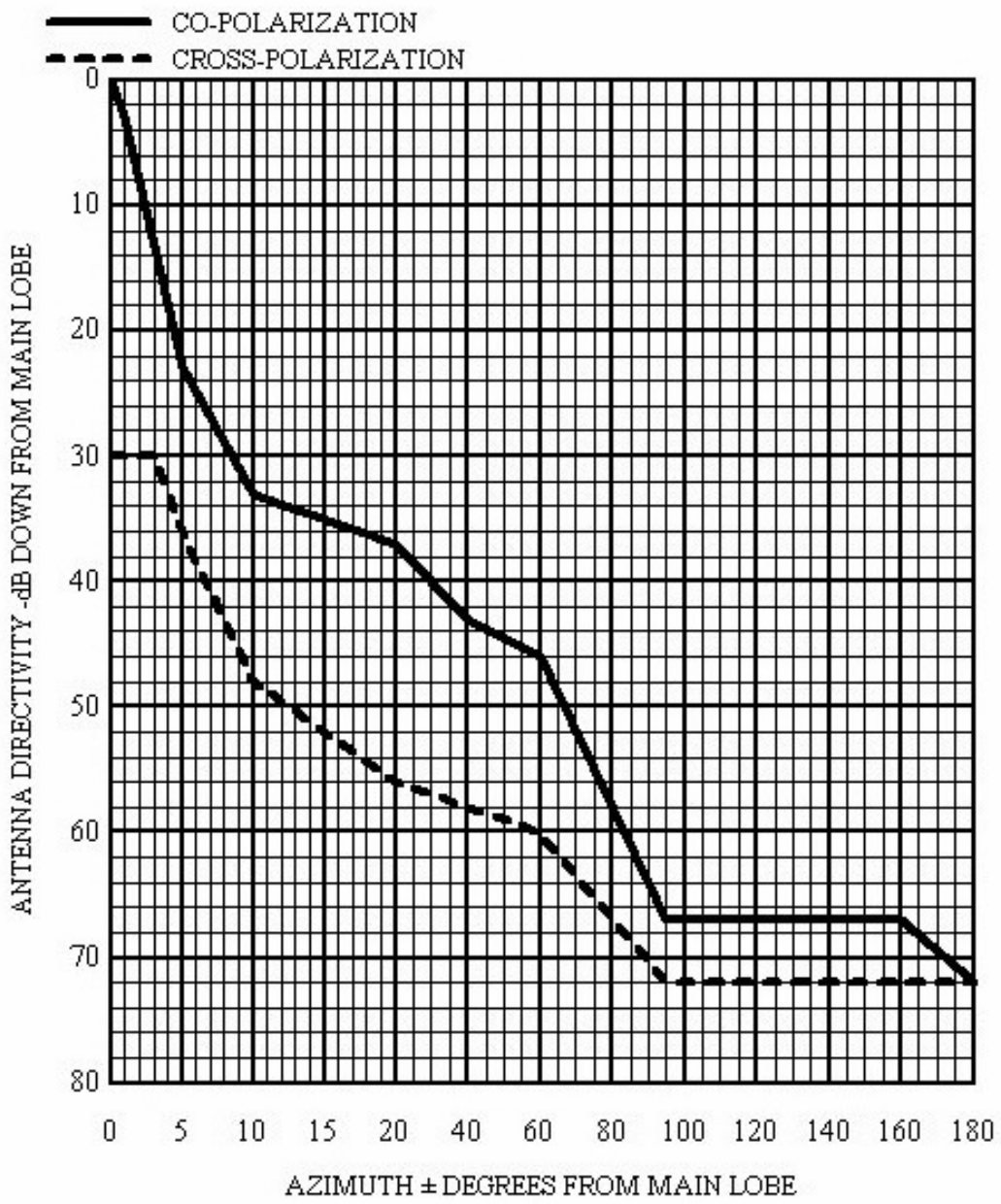
faini telecommunication systems	RADIATION PATTERN ENVELOPE ANTENNA TYPE THP 06-177	1351