Antenna THP 06-405 S

Antenna THP 06 405 S

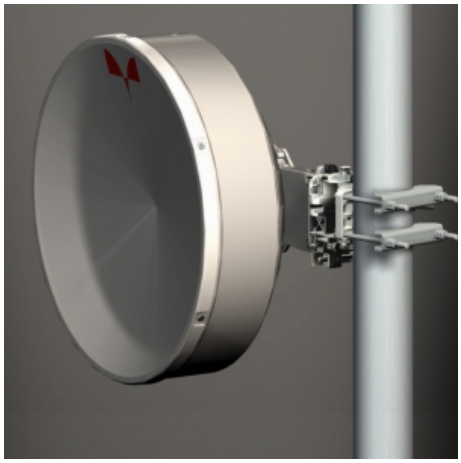

General Specifications

Diameter	0.6m
Standard Colour	RAL 7035
Shroud	Rigid plastic
Antenna Input	Interface for IEC waveguide R 500
Polarization	Single

Mechanical Characteristics

Pole	50Ã·115 mm
Elevation-fine adjustment	+/- 15 deg
Azimuth-fine adjustment	+/- 20 deg
Side struts, included	0
Side struts, optional	0
Net weight	12 Kg
Radome	Rigid plastic
Wind velocity Operational	45 m/s
Wind velocity Survival	70 m/s
Wind deflection	< 0.3 times the -3 dB beam width
(with a wind velocity of 45 m/s)	Specified wind deflection applies for 115 mm dia mounting pipe only

Antenna Dimensions

(pole mount included)

Height	653.0 mm
Width	719.0 mm
Depth	330.5 mm

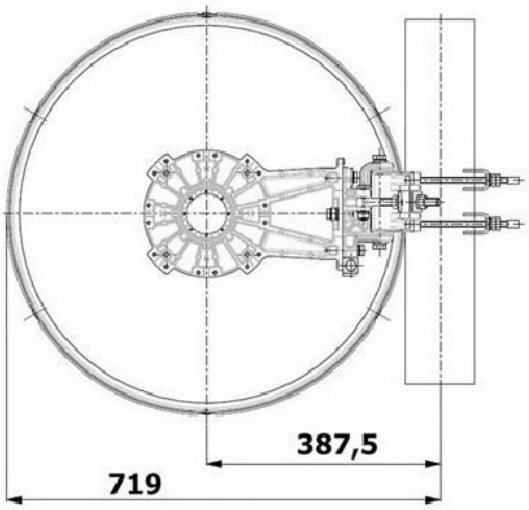

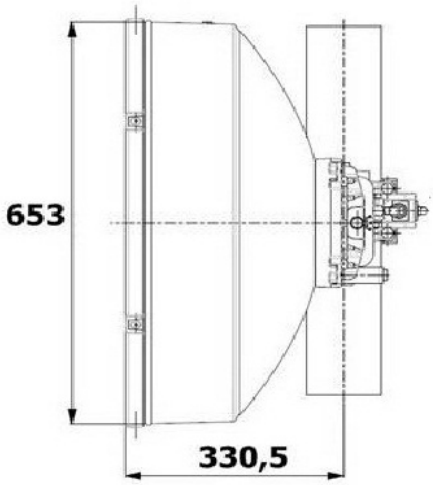

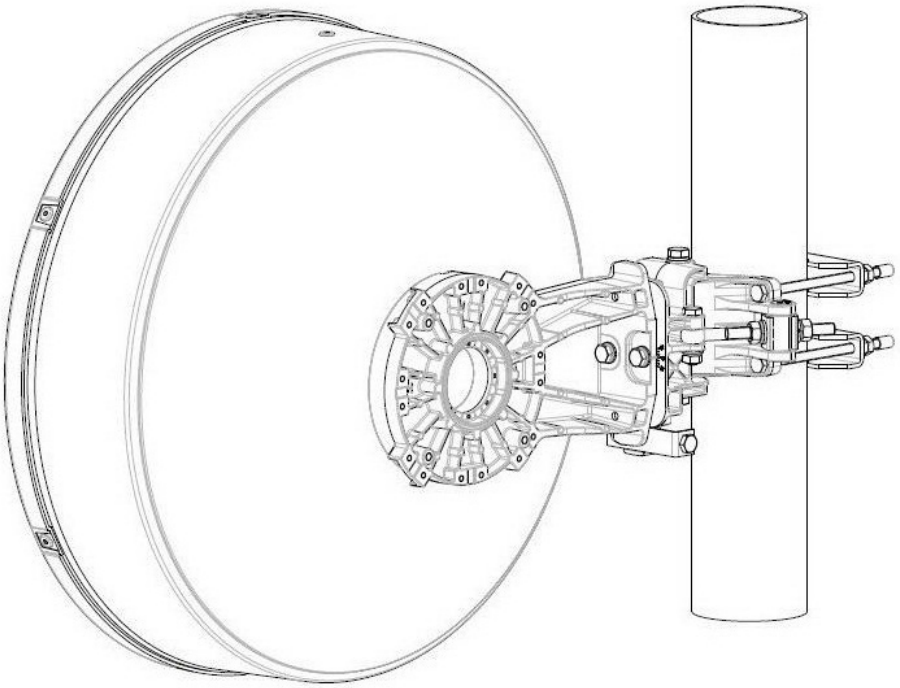

Wind forces at wind velocity survival rating and with 25 mm (1") ice load

Axial force	1444 N
Side force	715 N
Twisting Moment	527 N?m

Maximum forces exerted on a supporting structure as a result of wind (survival rating) from the most critical direction for each parameter. These values may not occur simultaneously. All forces are refered to the mounting pipe of 115 mm diameter.

Electrical Characteristics

Frequency range	40.5 - 43.5 GHz
Gain, low band	45.5 dBi
Gain, mid band	45.8 dBi
Gain, top band	46.1 dBi
Return Loss	17.7 dB
VSWR	1.3
HPBW	0.8°
Front to back ratio	68 dB
Isolation	NA
XPD	30 dB
Electrical Compliance	Class 3B
	ETSI 302 217

Shipping Information

Gross weight	15 Kg
Height	420 mm
Depth	750 mm
Width	750 mm
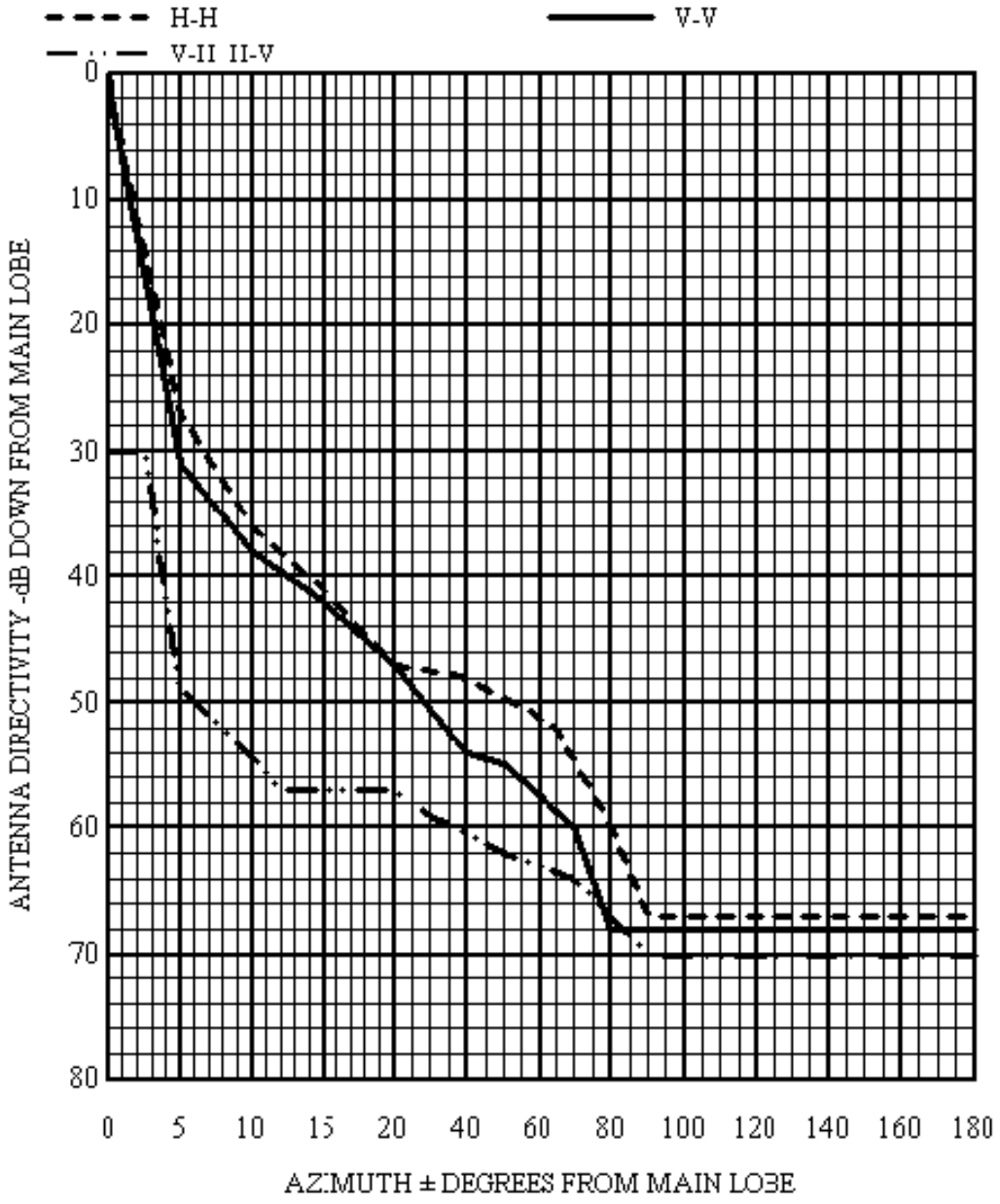
faini telecommunication systems	RADIATION PATTERN ENVELOPE ANTENNA TYPE THP 06-405	1501