Antenna THP06-142S

Antenna THP06-142S

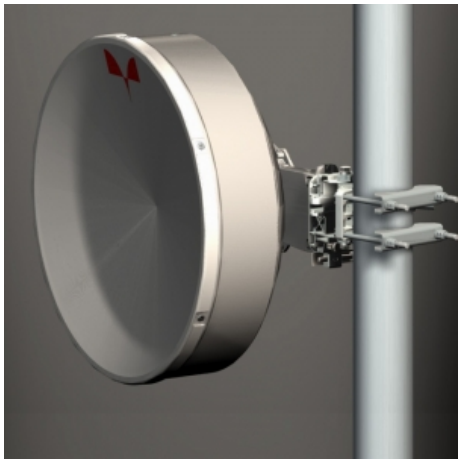

General Specifications

Diameter	0.6m
Standard Colour	RAl 7035
Shroud	Low profile
Antenna Input	Interface for IEC waveguide R 140
Polarization	Single

Mechanical Characteristics

Pole	50-115 mm
Elevation-fine adjustment	+/- 15 deg
Azimuth-fine adjustment	+/- 20 deg
Side struts, included	0
Side struts, optional	0
Net weight	12 Kg
Radome	Rigid plastic
Wind velocity Operational	45 m/s
Wind velocity Survival	70 m/s
Wind deflection	< 0.3 times the - 3 dB beam width
(with a wind velocity of 45 m/s)	Specified wind deflection applies for 115 mm dia mounting pipe only

Antenna Dimensions

(pole mount included)

Height	653.0 mm
Width	719.0 mm
Depth	330.5 mm

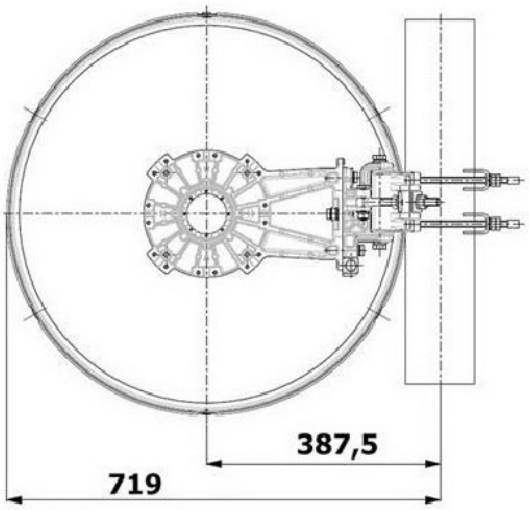

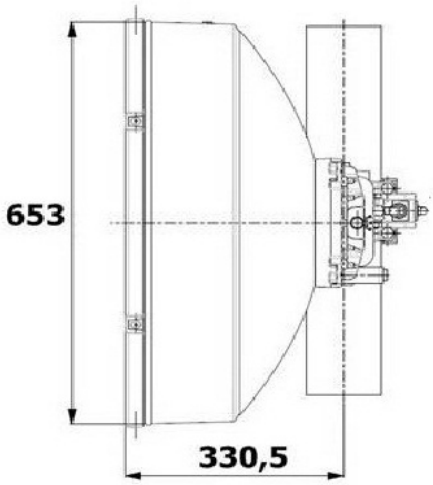

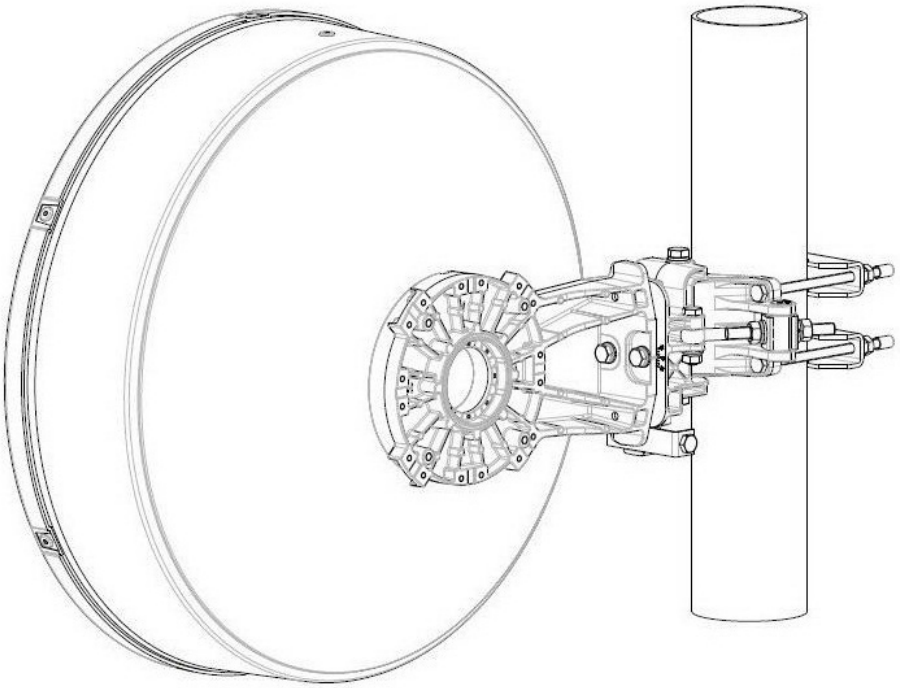

Wind forces at wind velocity survival rating and with 25 mm (1") ice load

Axial force	1444 N
Side force	715 N
Twisting Moment	527 N m

Maximum forces exerted on a supporting structure as a result of wind (survival rating) from the most critical direction for each parameter. These values may not occur simultaneously. All forces are referred to the mounting pipe of 115 mm diameter.

Electrical Characteristics

Frequency range	14.2 - 15.35 GHz
Gain, low band	36.8 dBi
Gain, mid band	37.1 dBi
Gain, top band	37.4 dBi
Return Loss	17.7 dB
VSWR	1.3
HPBW	2.4 deg
Front to back ratio	64 dB
Isolation	NA
XPD	30 dB
Electrical Compliance	ETSI 302 217 Class 3 ; Anatel Ato 932 Class 3
	ETSI 302 217

Shipping Information

Gross weight	15 Kg
Height	420 mm
Depth	750 mm
Width	750 mm
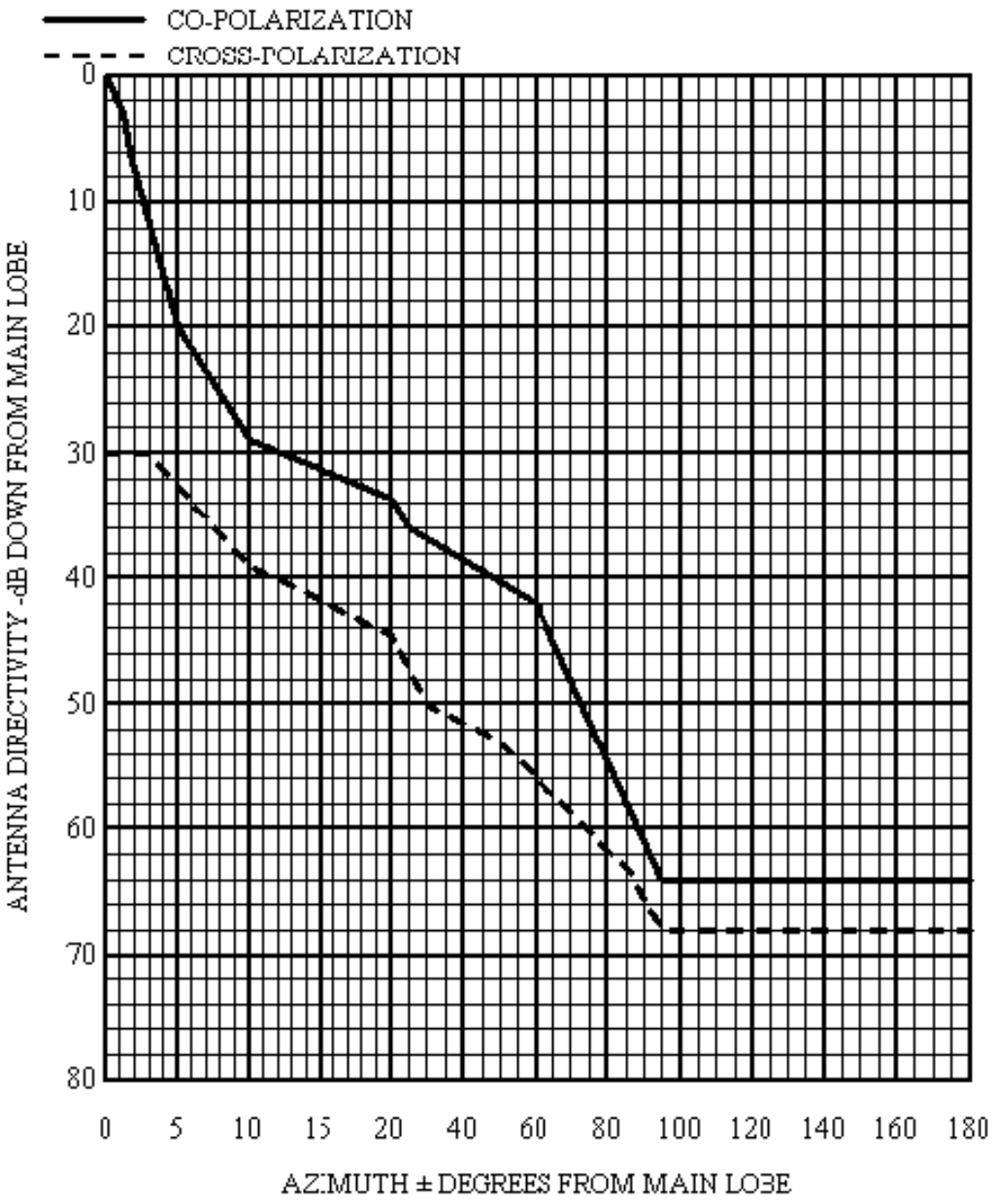
faini telecommunication systems	RADIATION PATTERN ENVELOPE ANTENNA TYPE THP 06-142	1287