Antenna HP 12-059 D WB

 Antenna HP 12-059 D WB

General Specifications

Diameter	1.2 m
Standard Colour	RAL 7035
Shroud	Low profile
Antenna Input	Interface for IEC waveguide R 70
Polarization	Dual

Mechanical Characteristics

Pole	115 mm
Elevation-fine adjustment	±15°
Azimuth-fine adjustment	±10°
Side struts, included	1
Side struts, optional	0
Net weight	58 Kg
Radome	Rigid plastic
Wind velocity Operational	45 m/s
Wind velocity Survival	70 m/s
Wind deflection	<0.3 times the -3 dB beamwidth
(with a wind velocity of 45 m/s)	Specified wind deflection applies for 115 mm dia mounting pipe only

Antenna Dimensions

(pole mount included)

Height	1260.0 mm
Width	1260.0 mm
Depth	1004.0 mm

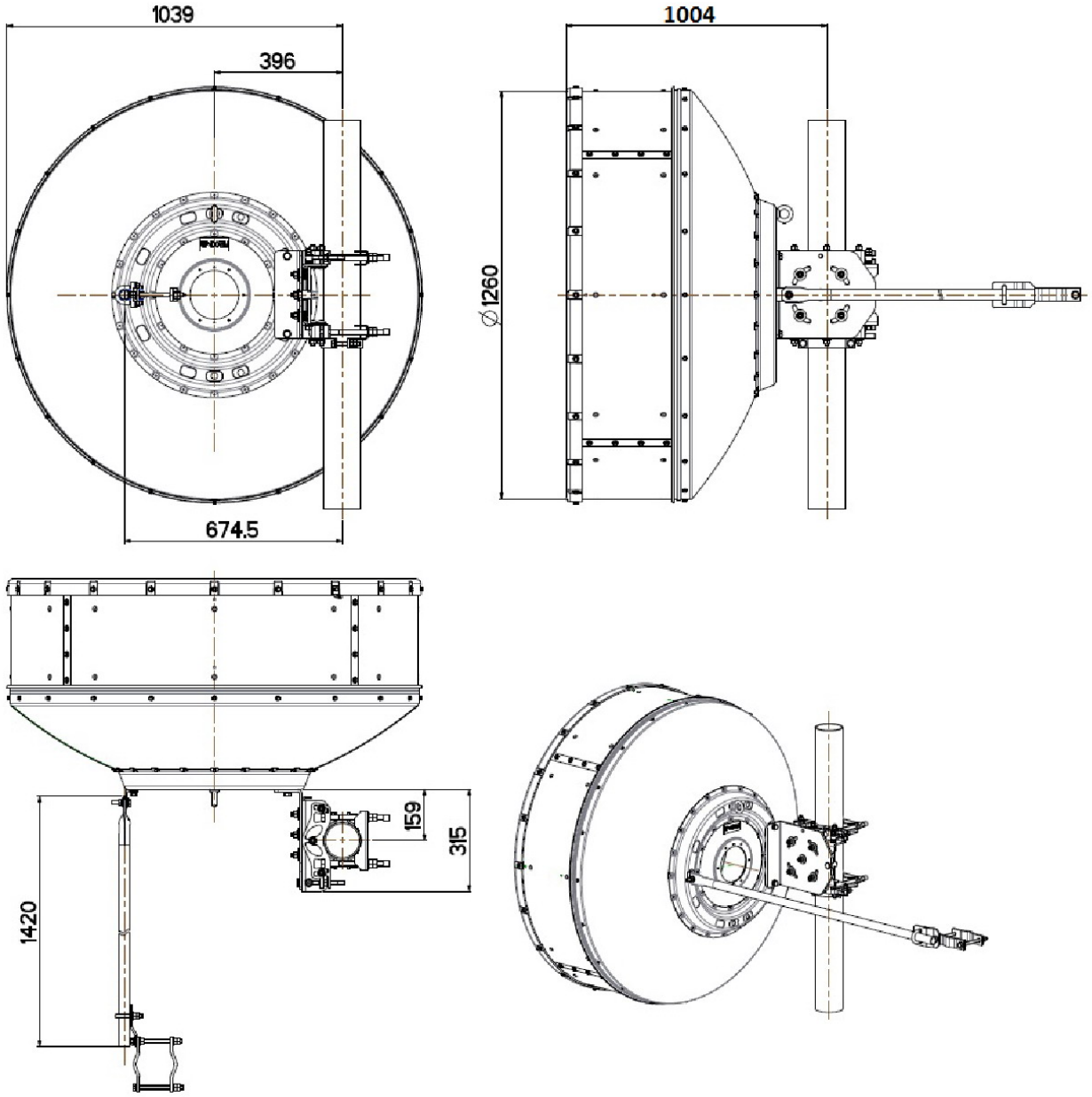

Wind forces at wind velocity survival rating and with 25 mm (1") ice load

Axial force	5270 N
Side force	2610 N
Twisting Moment	2110 N?m

Maximum forces exerted on a supporting structure as a result of wind (survival rating) from the most critical direction for each parameter. These values may not occur simultaneously. All forces are referred to the mounting pipe of 115 mm diameter.

Electrical Characteristics

Frequency range	5.925-7.125 GHz
Gain, low band	35.0 dBi
Gain, mid band	35.5 dBi
Gain, top band	36.0 dBi
Return Loss	22.1 dB
VSWR	1.17
HPBW	3.0°
Front to back ratio	62.0 dB
Isolation	35.0 dB
XPD	30.0 dB
Electrical Compliance	Class 3

Shipping Information

Gross weight	118 Kg
Height	940 mm
Depth	1460 mm
Width	1400 mm
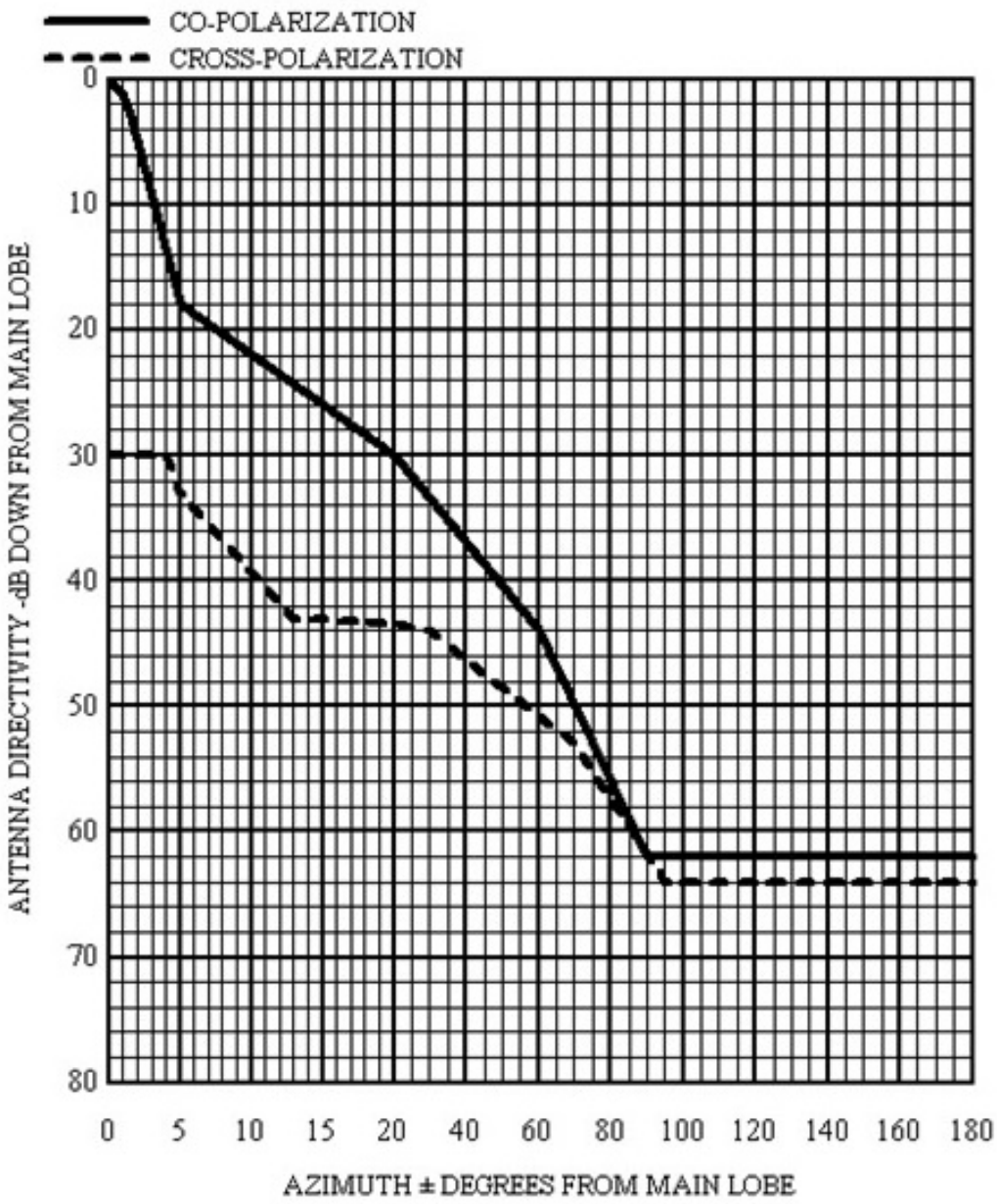
faini telecommunication systems	RADIATION PATTERN ENVELOPE ANTENNA TYPE HP 12-059 D WB	1488