Antenna THP 08 127 S

Antenna THP 08 127 S

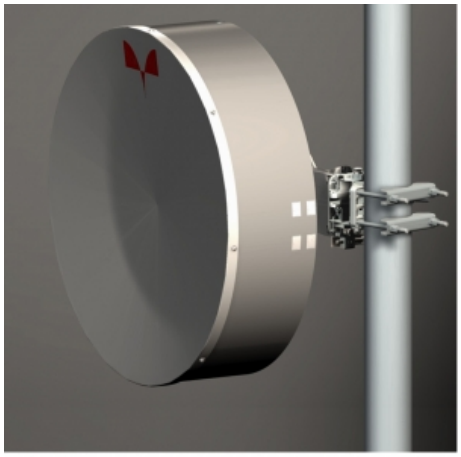

General Specifications

Diameter	0.8m
Standard Colour	RAL 7035
Shroud	Low profile
Antenna Input	Interface for IEC waveguide R 120
Polarization	Single

Mechanical Characteristics

Pole	115 mm
Elevation-fine adjustment	+/- 15 deg
Azimuth-fine adjustment	+/- 20 deg
Side struts, included	0
Side struts, optional	1
Net weight	17 Kg
Radome	Rigid plastic
Wind velocity Operational	30 m/s (with optional strut Kit 45 m/s)
Wind velocity Survival	70 m/s
Wind deflection	<0.3 times the - 3 dB beam width
(with a wind velocity of 30 m/s)	Specified wind deflection applies for 115 mm dia mounting pipe only

Antenna Dimensions

(pole mount included)

Height	842 mm
Width	814 mm
Depth	434 mm

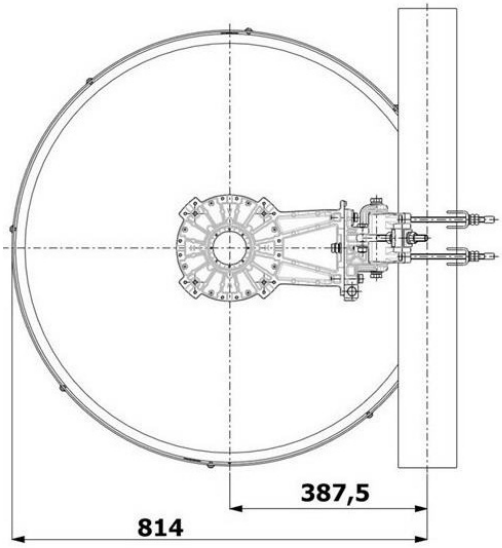

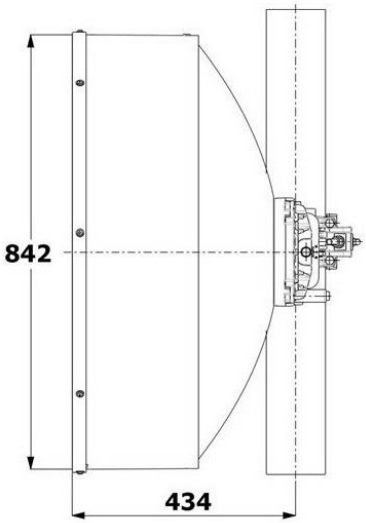

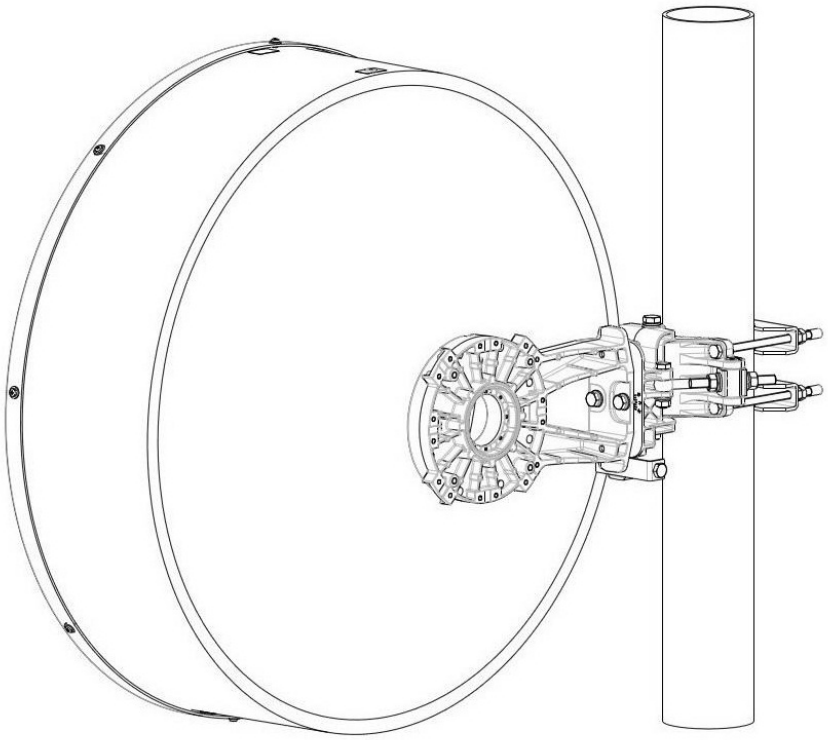

Wind forces at wind velocity survival rating and with 25 mm (1") ice load

Axial force	2230 N
Side force	1105 N
Twisting Moment	821 N m

Maximum forces exerted on a supporting structure as a result of wind (survival rating) from the most critical direction for each parameter. These values may not occur simultaneously. All forces are refered to the mounting pipe of 115 mm diameter.

Electrical Characteristics

Frequency range	12.7 - 13.25 GHz
Gain, low band	38.3 dBi
Gain, mid band	38.6 dBi
Gain, top band	38.9 dBi
Return Loss	17.7 dB
VSWR	1.3
HPBW	2.2°
Front to back ratio	64.0 dB
Isolation	NA
XPD	30.0 dB
Electrical Compliance	Class 3
	ETSI 302 217

Shipping Information

Gross weight	23 Kg
Height	520 mm
Depth	920 mm
Width	930 mm
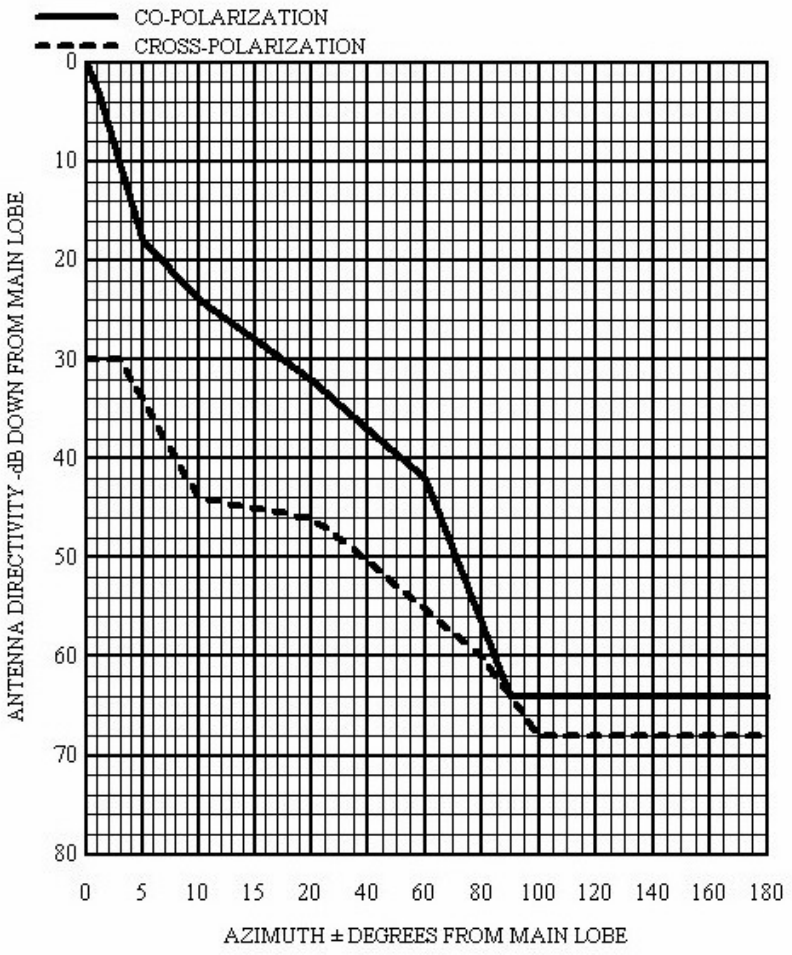
faini telecommunication systems	RADIATION PATTERN ENVELOPE ANTENNA TYPE THP 08-127	1077