Antenna THP 12-142 D

Antenna THP 12-142 D

General Specifications

Diameter	1.2m
Standard Colour	RAL 7035
Shroud	Low profile
Antenna Input	Interface for IEC waveguide R 140
Polarization	Dual

Mechanical Characteristics

Pole	115 mm
Elevation-fine adjustment	+/- 15 deg
Azimuth-fine adjustment	+/- 10 deg
Side struts, included	1
Side struts, optional	0
Net weight	50 Kg
Radome	Rigid plastic
Wind velocity Operational	45 m/s
Wind velocity Survival	70 m/s
Wind deflection	<0.3 times the -3 dB beamwidth
(with a wind velocity of 45 m/s)	Specified wind deflection applies for 115 mm dia mounting pipe only

Antenna Dimensions

(pole mount included)

Height	1260 mm
Width	1260 mm
Depth	808 mm

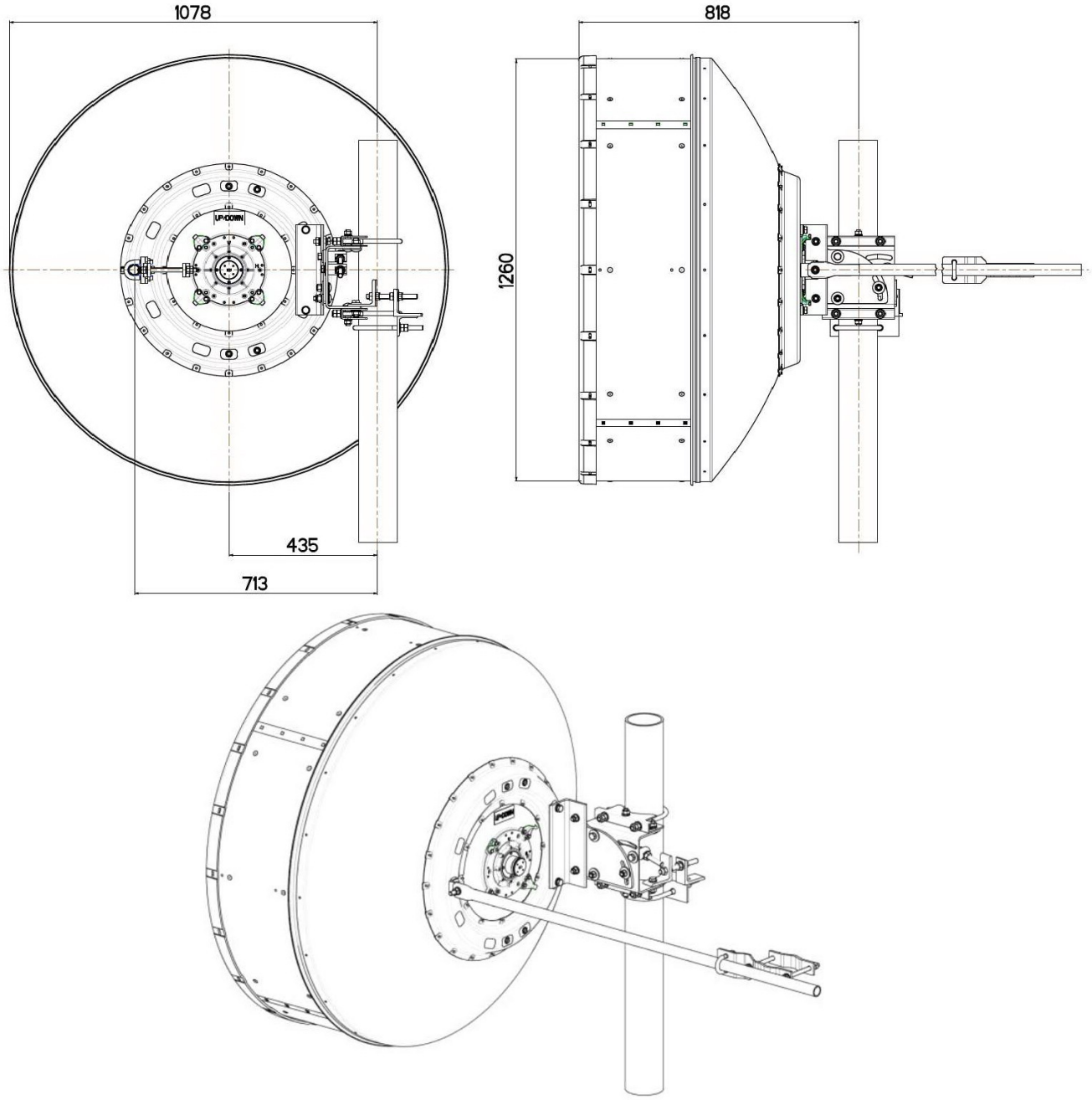

Wind forces at wind velocity survival rating and with 25 mm (1") ice load

Axial force	5270 N
Side force	2610 N
Twisting Moment	2110 N*m

Maximum forces exerted on a supporting structure as a result of wind (survival rating) from the most critical direction for each parameter. These values may not occur simultaneously. All forces are referred to the mounting
pipe of 115 mm diameter.

Electrical Characteristics

Frequency range	14.2 - 15.35 GHz
Gain, low band	42.5 dBi
Gain, mid band	42.7 dBi
Gain, top band	42.9 dBi
Return Loss	17.7 dB
VSWR	1.3
HPBW	1.2 deg
Front to back ratio	70.0 dB
Isolation	35.0 dB
XPD	30.0 dB
Electrical Compliance	Class 3
	ETSI 302 217

Shipping Information

Gross weight	78 Kg
Height	1530 mm
Depth	480 mm
Width	1380 mm