# Antenna THP 12 127 S

Antenna THP 12 127 S

## General Specifications

| | |
|---|---|
| Diameter | 1.2m |
| Standard Colour | RAL 7035 |
| Shroud | Low profile |
| Antenna Input | Interface for IEC waveguide R 120 |
| Polarization | Single |

## Mechanical Characteristics

| | |
|---|---|
| Pole | 115 mm |
| Elevation-fine adjustment | +/- 15 deg |
| Azimuth-fine adjustment | +/- 10 deg |
| Side struts, included | 1 |
| Side struts, optional | 0 |
| Net weight | 50 Kg |
| Radome | Rigid plastic |
| Wind velocity Operational | 45 m/s |
| Wind velocity Survival | 70 m/s |
| Wind deflection | <0.3 times the -3 dB beamwidth |
| (with a wind velocity of 45 m/s) | Specified wind deflection applies for 115 mm dia mounting pipe only |

## Antenna Dimensions

(pole mount included)

| | |
|---|---|
| Height | 1260 mm |
| Width | 1260 mm |
| Depth | 818 mm |

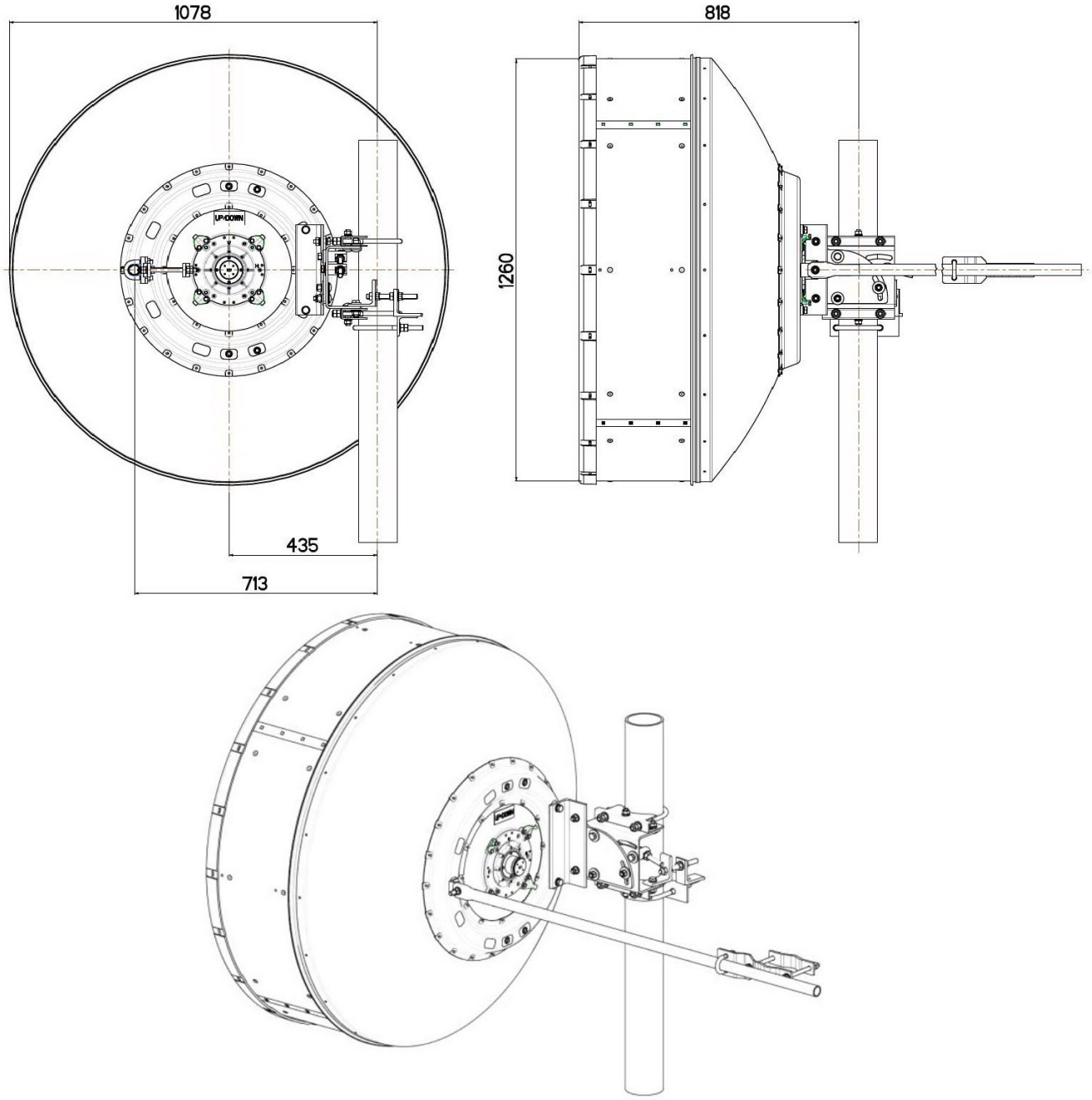

## Wind forces at wind velocity survival rating and with 25 mm (1") ice load

| | |
|---|---|
| Axial force | 5270 N |
| Side force | 2610 N |
| Twisting Moment | 2110 N m |

Maximum forces exerted on a supporting structure as a result of wind (survival rating) from the most critical direction for each parameter. These values may not occur simultaneously. All forces are refered to the mounting pipe of 115 mm diameter.

## Electrical Characteristics

| | |
|---|---|
| Frequency range | 12.7 - 13.25 GHz |
| Gain, low band | 41.6 dBi |
| Gain, mid band | 41.9 dBi |
| Gain, top band | 42.2 dBi |
| Return Loss | 17.7 dB |
| VSWR | 1.3 |
| HPBW | 1.4 deg |
| Front to back ratio | 69 dB |
| Isolation | NA |
| XPD | 30.0 dB |
| Electrical Compliance | Class 3 |
| | ETSI 302 217 |

## Shipping Information

| | |
|---|---|
| Gross weight | 78 Kg |
| Height | 1530 mm |
| Depth | 480 mm |
| Width | 1380 mm |
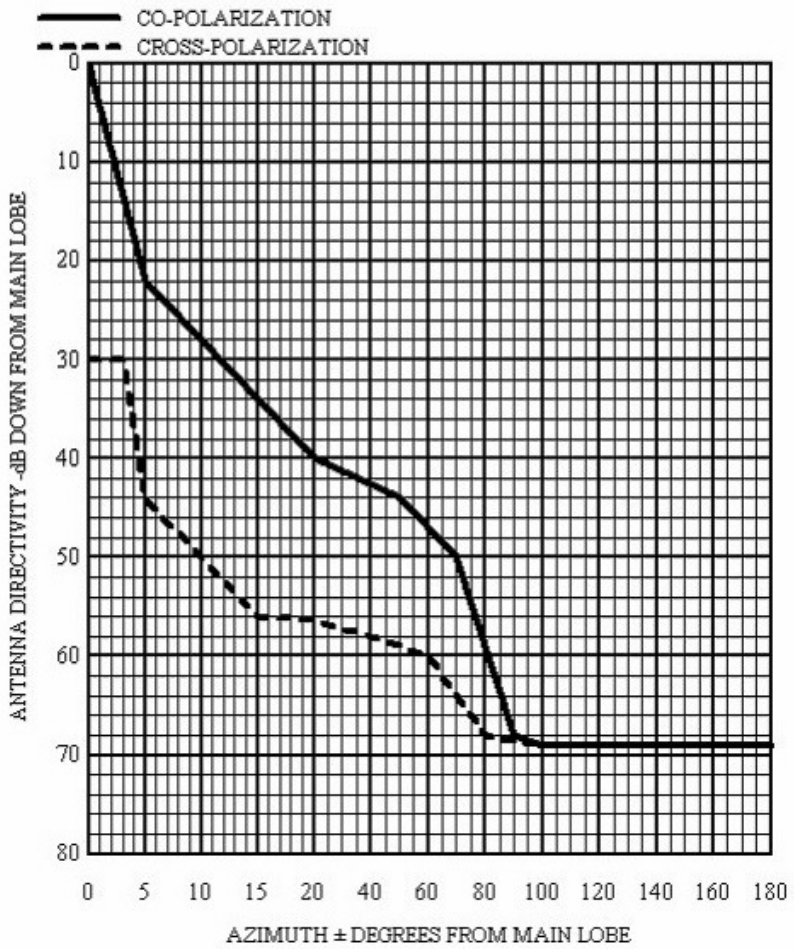
| faini telecommunication systems | RADIATION PATTERN ENVELOPE<br>ANTENNA TYPE THP 12-127 | 1170 |
|---|---|---|