Antenna THP 08-275 DI

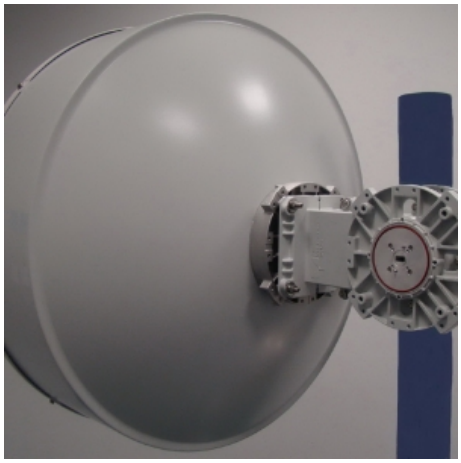

General Specifications

Diameter	0.8m
Standard Colour	RAL 7035
Shroud	Low profile
Antenna Input	Interface for IEC waveguide R 320
Polarization	Dual

Mechanical Characteristics

Pole	115 mm
Elevation-fine adjustment	+/- 15 deg
Azimuth-fine adjustment	+/- 20 deg
Side struts, included	0
Side struts, optional	0
Net weight	22 Kg
Radome	Rigid plastic
Wind velocity Operational	30 m/s (45 m/s with optional kit)
Wind velocity Survival	70 m/s
Wind deflection	<0.3 times the -3 dB beamwidth
(with a wind velocity of 45 m/s)	Specified wind deflection applies for mm dia mounting pipe only

Antenna Dimensions

(pole mount included)

Height	842 mm
Width	814 mm
Depth	754 mm

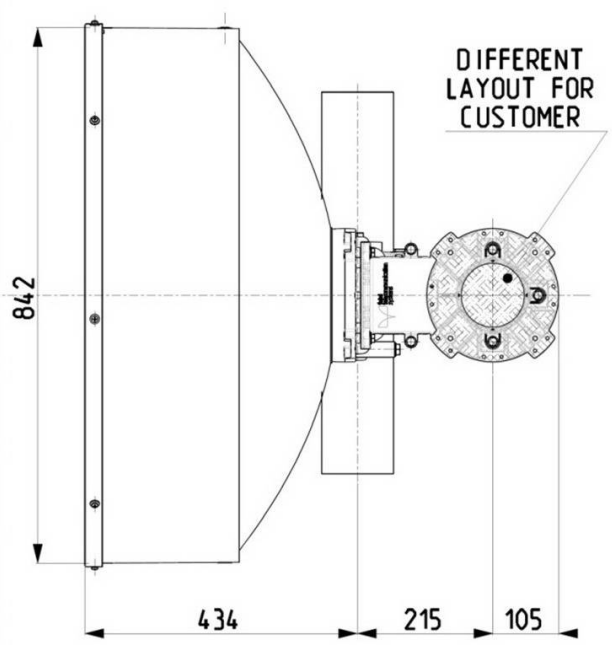

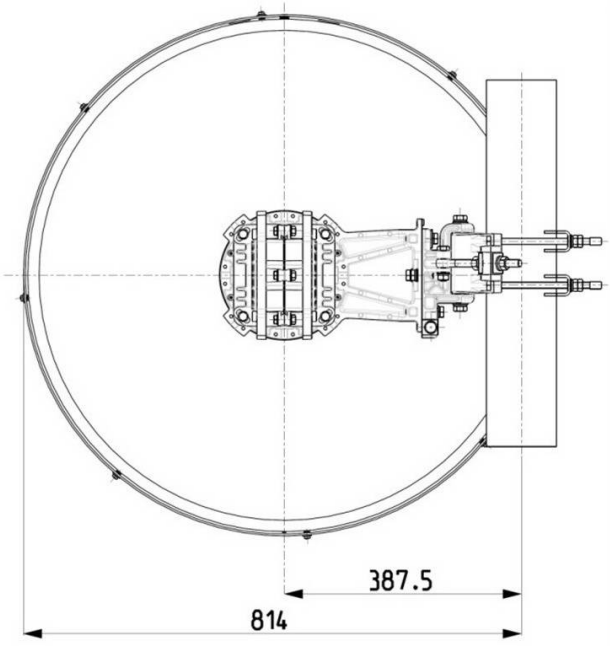

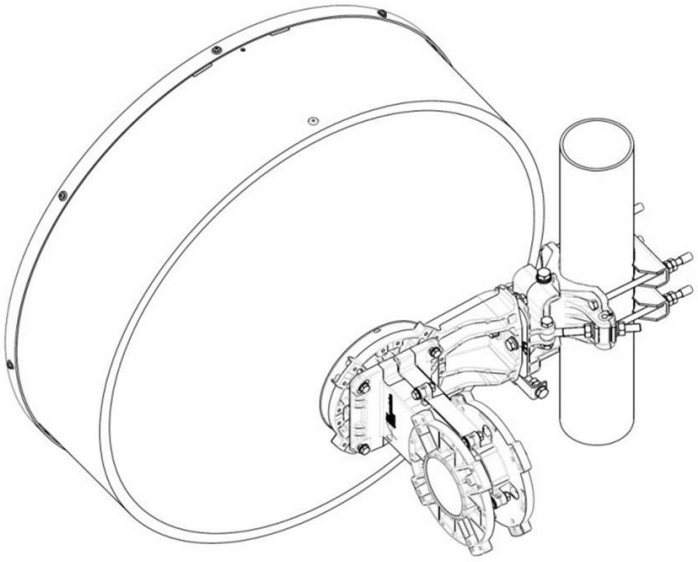

Wind forces at wind velocity survival rating and with 25 mm (1") ice load

Axial force	2230 N
Side force	1105 N
Twisting Moment	821 N*m

Maximum forces exerted on a supporting structure as a result of wind (survival rating) from the most critical direction for each parameter. These values may not occur simultaneously. All forces are referred to the mounting pipe of 115 mm diameter.

Electrical Characteristics

Frequency range	27.5 - 29.5 GHz
Gain, low band	43.6 dBi
Gain, mid band	43.9 dBi
Gain, top band	44.2 dBi
Return Loss	17.7 dB
VSWR	1.3
HPBW	1°
Front to back ratio	70 dB
Isolation	35 dB
XPD	30 dB
Electrical Compliance	Class 3
	ETSI 302 217

Shipping Information

Gross weight	28 Kg
Height	520 mm
Depth	920 mm
Width	930 mm

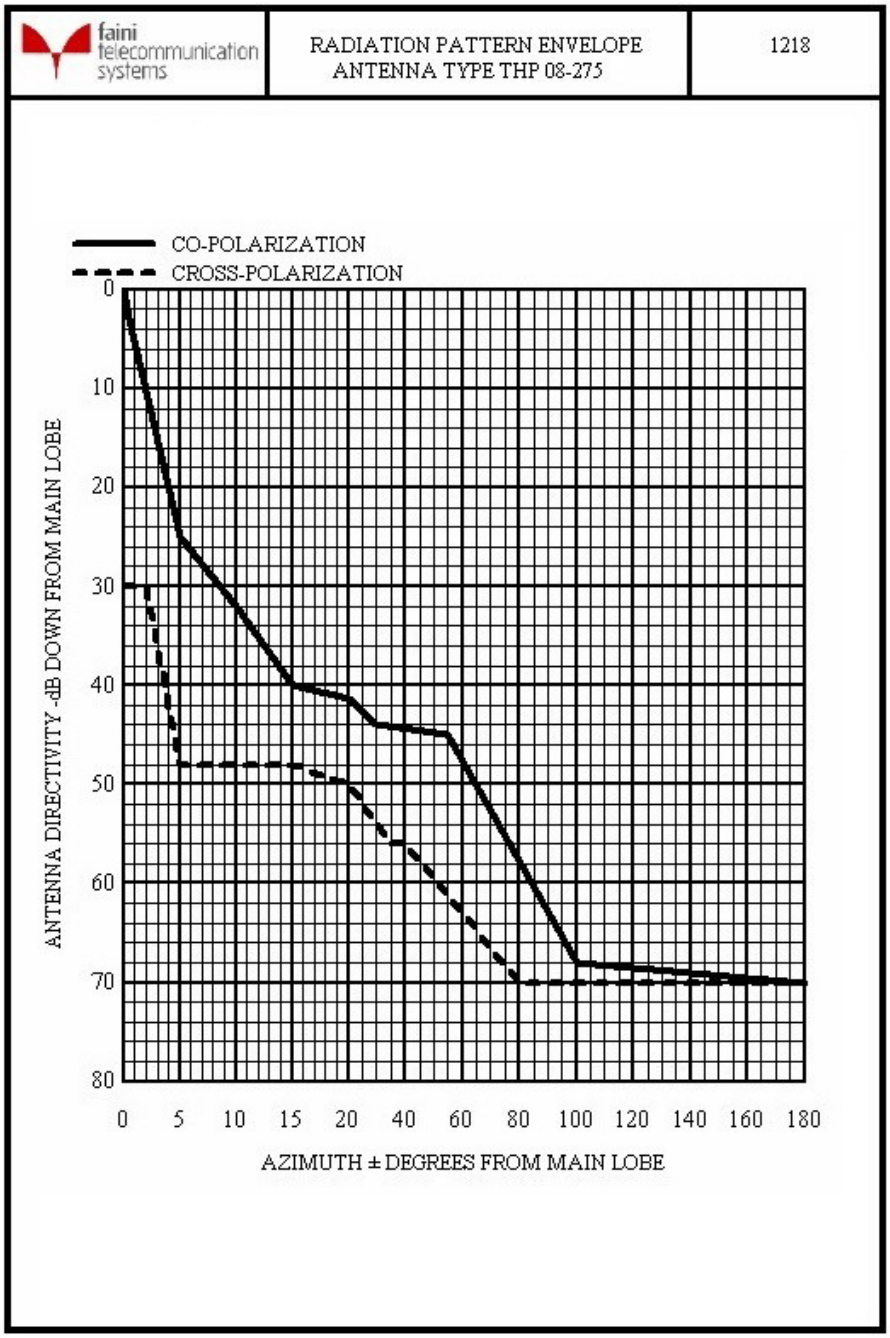
faini telecommunication systems
RADIATION PATTERN ENVELOPE
ANTENNA TYPE THP 08-275
1218
CO-POLARIZATION
CROSS-POLARIZATION
ANTENNA DIRECTIVITY -dB DOWN FROM MAIN LOBE
0
10
20
30
40
50
60
70
80
0 5 10 15 20 40 60 80 100 120 140 160 180
AZIMUTH ± DEGREES FROM MAIN LOBE